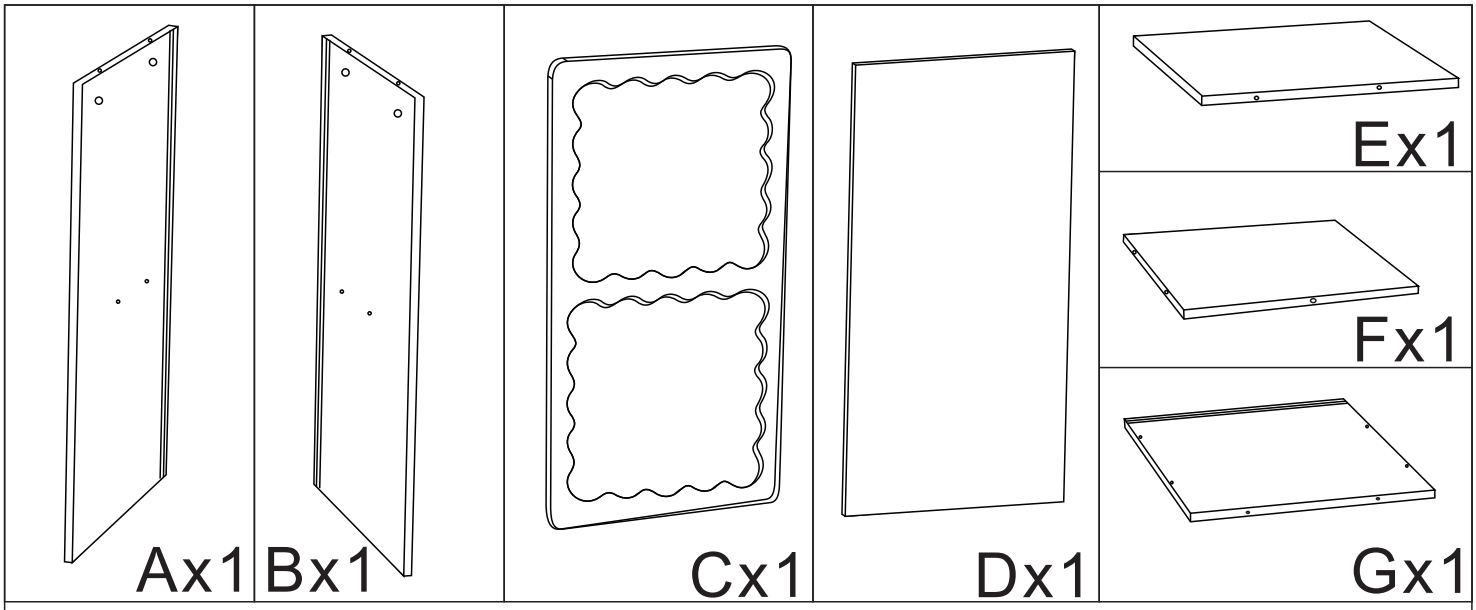
Ax1
Bx1
Cx1
Dx1
Ex1
Fx1
Gx1

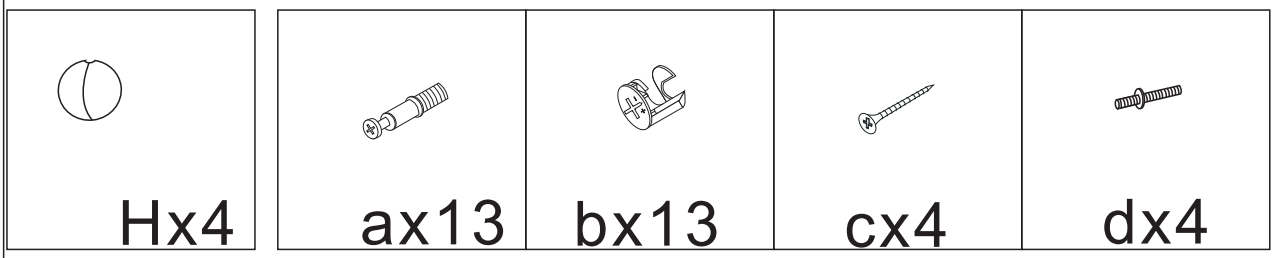
Hx4
ax13
bx13
cx4
dx4

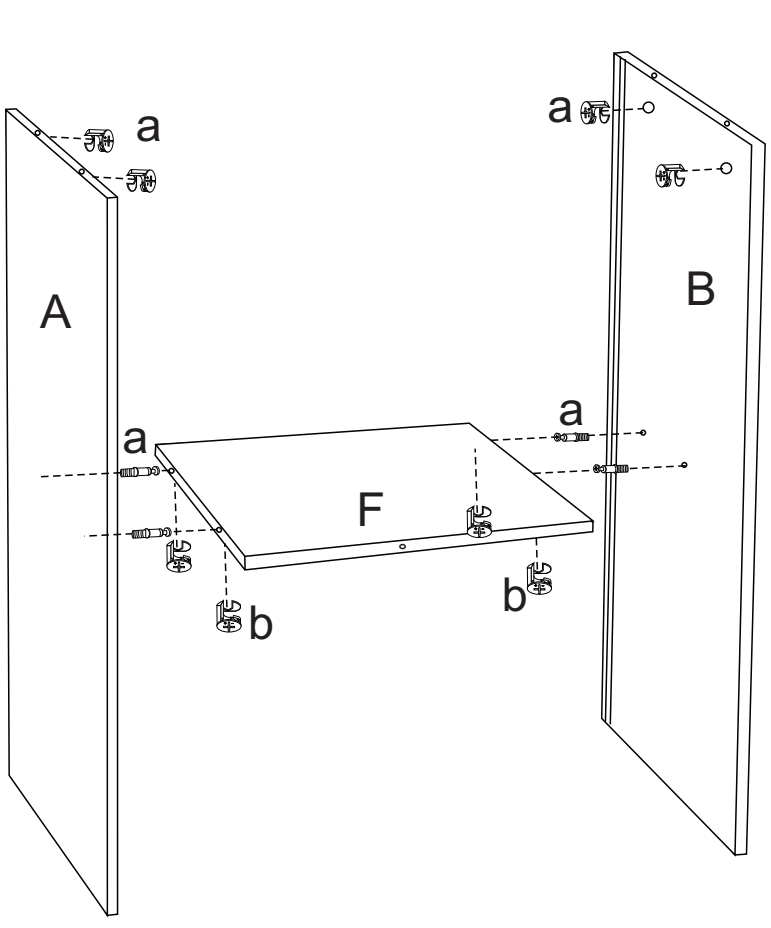
a
A
a
B
a
a
F
b
b

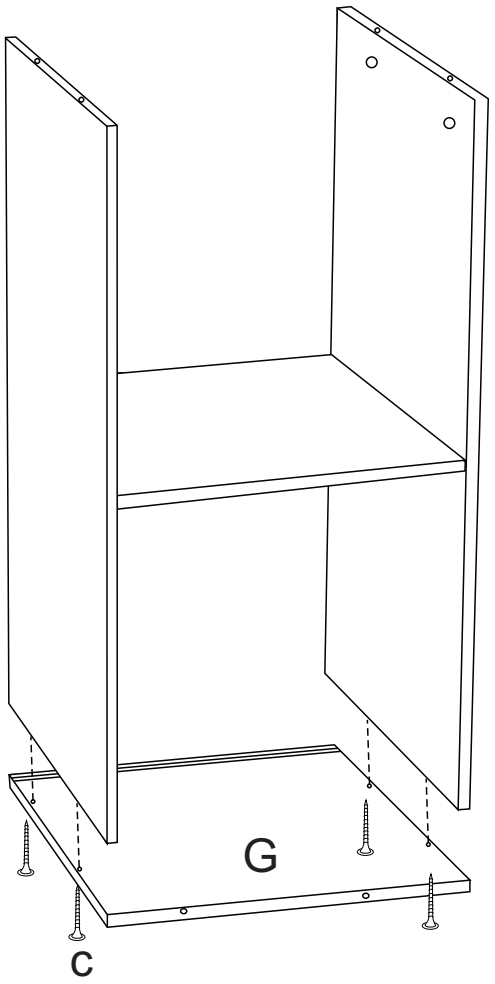
G
c

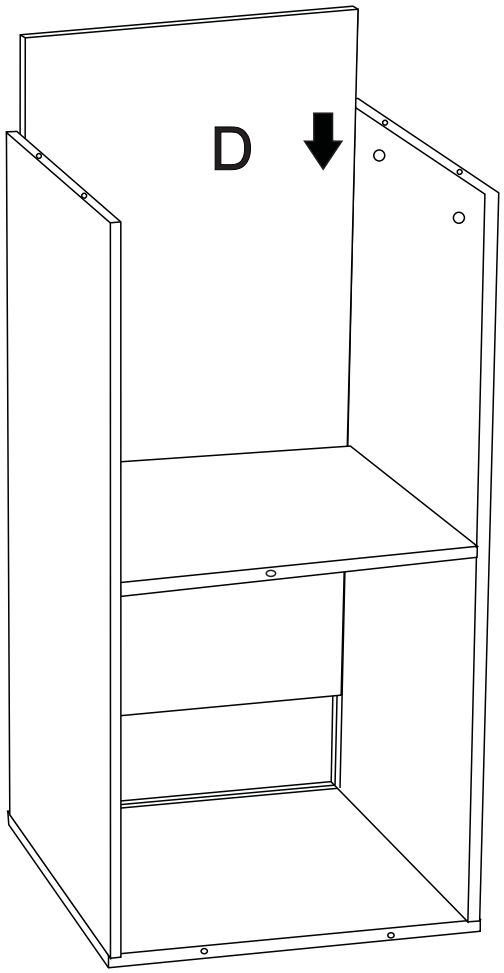
D

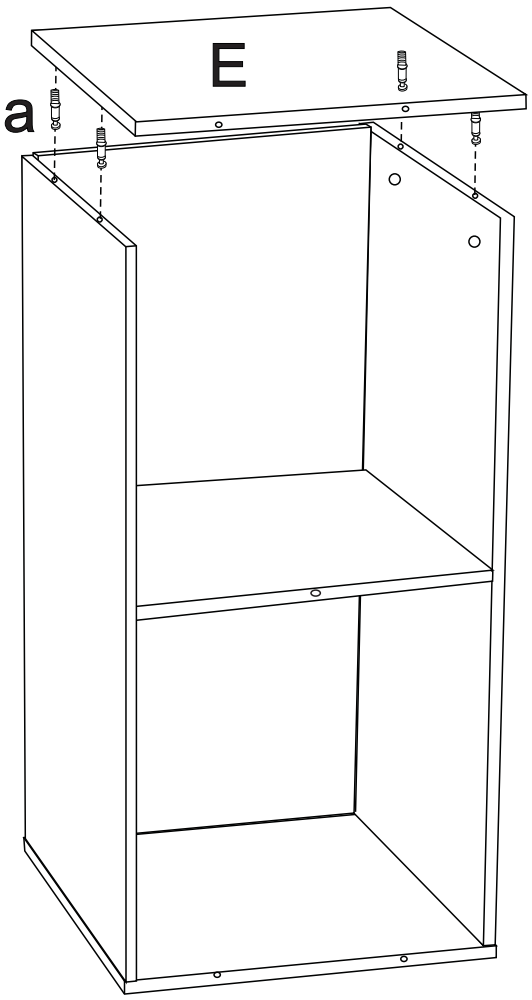
E
a

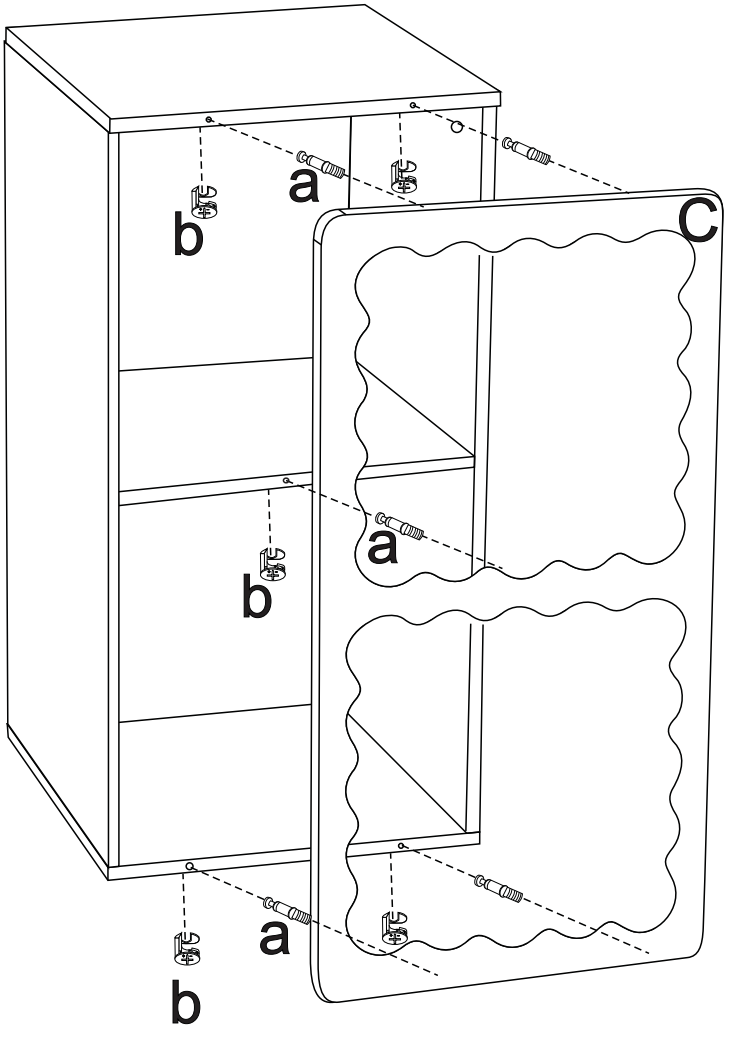
a
b
C
a
b
a
b

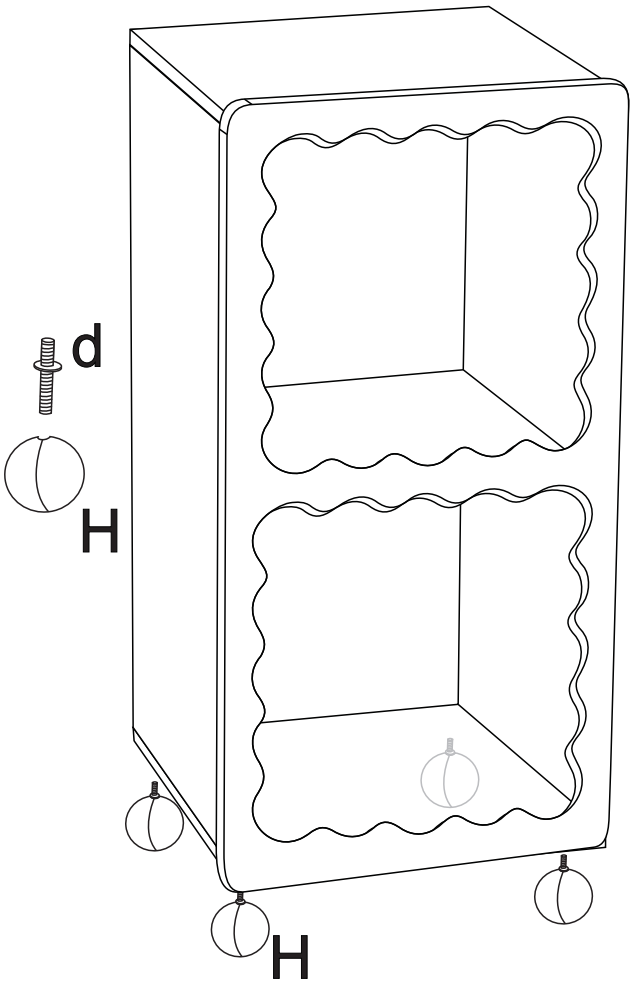
d
H
H